Časopis priemyselnej elektrotechniky (JIEE)
Journal of Industrial Electrical Engineering
ISSN 2454-0900
www.jiee.eu

Design of converter for controlling DC motors

[1]*Jozef PAJTÁŠ*, [2]*Dobroslav KOVÁČ*

[1, 2] Department of Theoretical and Industrial Electrical Engineering, Faculty of Electrical Engineering and Informatics, Technical University of Košice, Slovak Republic

[1]jozef.pajtas@student.tuke.sk, [2]dobroslav.kovac@tuke.sk

***Abstract* — The paper describes the design of the converter for control of two DC motors powered by 12 volts. We will discuss several proposals. After that we will try to select the most appropriate one. Converter, which will create a stabilized voltage of 5V will be further described. This is needed to power the Arduino microprocessor and the sensors of pressure.**

***Keywords* — Arduino, converter, PWM, IR2111, NE555, LM2576ADJ**

I. Introduction

We need to design a converter for controlling two motors in order to control the direction and speed of the motors based on the evaluation of the signal from the sensors of pressure. The signal from the sensors will be evaluated in the Arduino microcontroller. The output of the Arduino is a PWM signal which will be the controlling signal for a converter designed.

There will be two accumulated drills powered by 12V available. Drills are supplied with a 12 V battery. Therefore, the converter must be adjusted to work with 12V. There will be no need to purchase external batteries.

II. Design of Bridge Converter Using an IR2111 Driver

The first design of the converter is composed of IR2111 driver. It is a high voltage MOSFET and IGBT driver with output channels designed for half-bridge applications. The basic circuit diagram for controlling of one motor is shown in Fig. 1. It is a bridge connection of transistors.

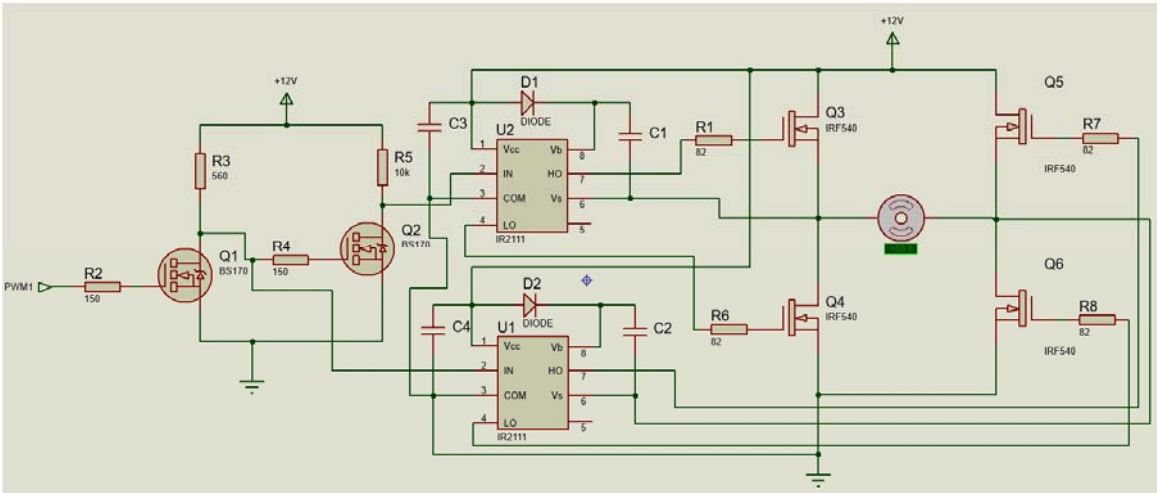

Fig. 1 Converter by using an IR2111 driver

This connection is characterized by bipolar motor controlling. The direction and speed of the motor

can be changed by using one PWM signal. The duty cycle of PWM can be between 0 and 1. If the duty cycle equals 0,5, the motor will not be rotated, if the duty cycle equals between 0.1 and 0.4, the motor will be rotated in one direction. The motor will be rotated in the opposite direction if the duty cycle equals between 0.6 and 0.9. When using the IR2111 circuit, it is necessary to switch transistors additionally to prevent short circuits.

It is required to have two parts of IR2111, because circuit is bridge connected. Thus, we need to have two control signals - inverted and non-inverted. We get these signals if we use two parallel-connected transistors in common emitter mode. Transistor in a common emitter mode is able to invert input signal. Using two transistors, we get inverted and non-inverted PWM signal required to control transistors in a bridge connection [2].

III. DESIGN OF HALF – BRIDGE CONVERTER FOR UNIPOLAR MOTOR CONTROLLING

The circuit diagram of second design is shown in Fig. 2. This is a simpler diagram. The motor is controlled by using unipolar signal. However, the input signal is a bipolar PWM signal from Arduino microcontroller. This signal enters the operational amplifier. Then we get a signal from an operational amplifier between + 12V and -12V, which enters into a complementary pair of transistors. These signals can change the direction and speed of the motor by using IRF540 and IRF9540 transistors. These transistors are high voltage MOSFET transistors with N and P channel.

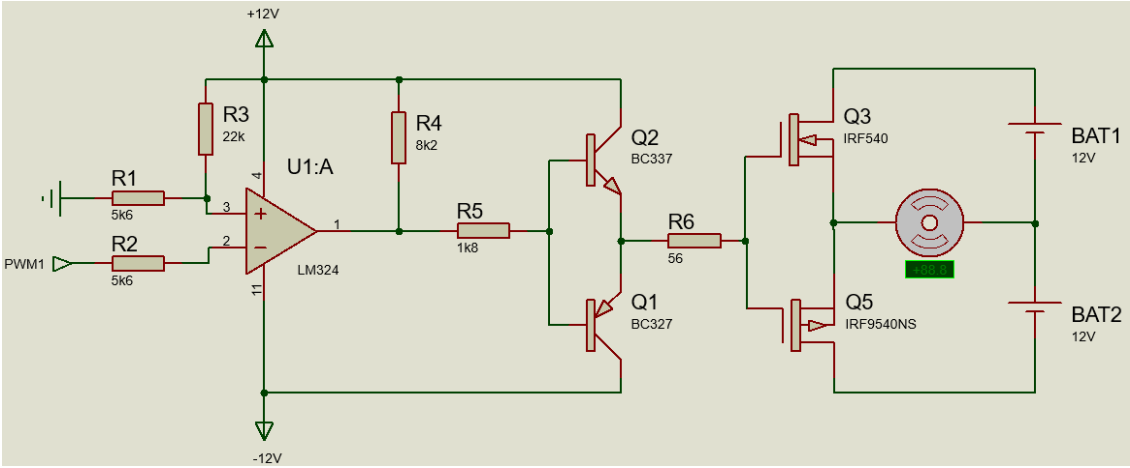

Fig. 2 Converter for unipolar motor controlling

IV. CONVERTER FOR RELAY USING MOTOR CONTROLLING

Fig. 3 shows the circuit diagram of next converter. In this case, two signals are needed. The PWM signal that will be able to control speed of rotation of the motor and a second signal that will determine the direction of rotation. We obtain both signals from Arduino microcontroller.

The direction of rotation will be provided by using two switching relays powered by 12 V. It will be possible to reverse the polarity of the motor by using relay contacts. The motor will be rotated to one or the other side.

The signal for the direction of rotation will have only two values. The logical 1 represented by 5 volts or a logical 0 represented by 0 volts. This means that the relay contacts are in one or the other position. It should be noted, that the signal for the direction is inverted.

Diodes are also applied in this scheme. They are connected parallel to the motor and relay. These diodes have a protective function. Since relay has a coil inside and the motor includes inductance, diodes serve to protect the transistors against damage.

The Arduino provides PWM signal with 500Hz of frequency. This frequency is too low to control the speed of motor. After measuring, we have found it necessary that the frequency of PWM signal should be around 10 kHz. This signal must be adjusted. The PWM signal from the Arduino must be filtered by using a pair of RC filters. After that, we obtain analog signal that enters into the comparator, where it is compared with the signal obtained from NE555. We get the PWM signal at the output of the comparator.

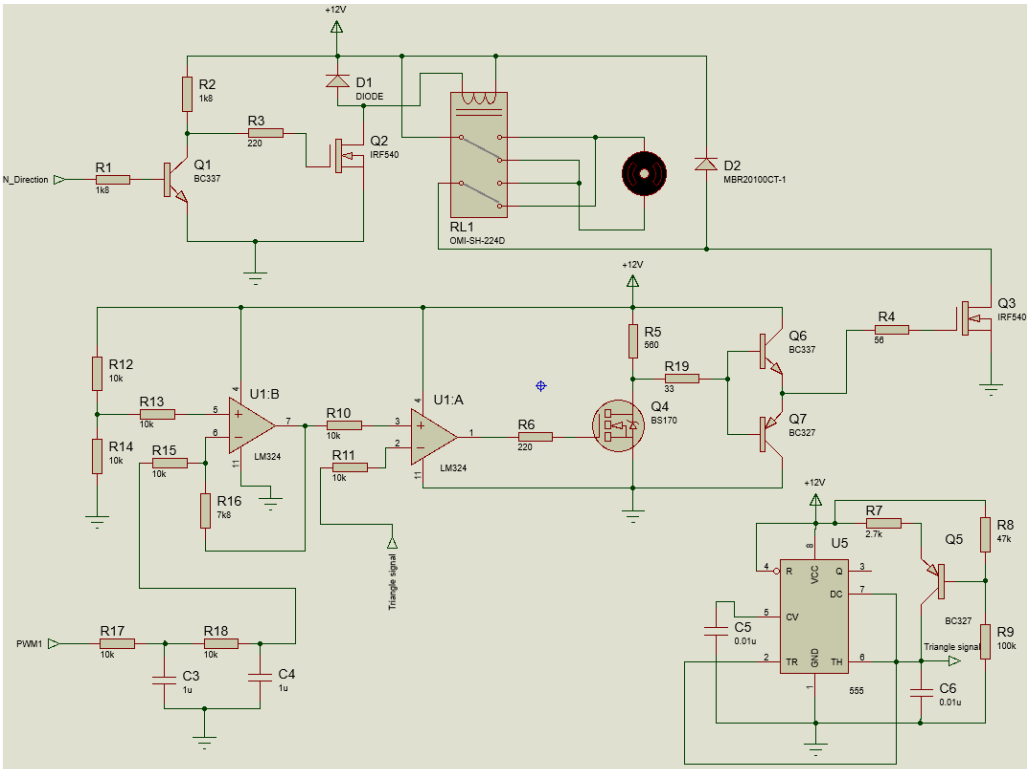

Fig. 3 Converter for relay using motor controlling

The circuit of NE555 is shown in Fig. 4. We can receive a linear ramp generating signal between 4 and 8 volts with frequency of 10 kHz as shown in Fig. 5 [2].

If this signal is compared with the output signal from operational amplifier in a comparator, we will get a PWN signal of 10 kHz at the output of a comparator. It is sufficient for our application.

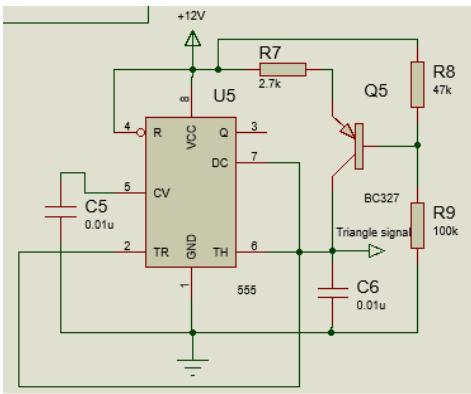

Fig. 4 NE555 scheme

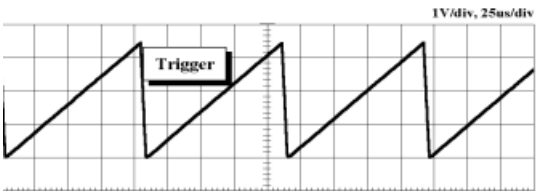

Fig. 5 Output trigger signal from Ne555

V. VOLTAGE REGULATOR

This application should be independent, therefore it is necessary to have independent voltage source. The microcontroller Arduino and the analog sensors of pressure FSR400 will be powered from this source. They need 5 volts in order to work.

One way how to create a stabilized 5 volts source is to use LM2576ADJ circuit in connection shown in Fig. 4 .

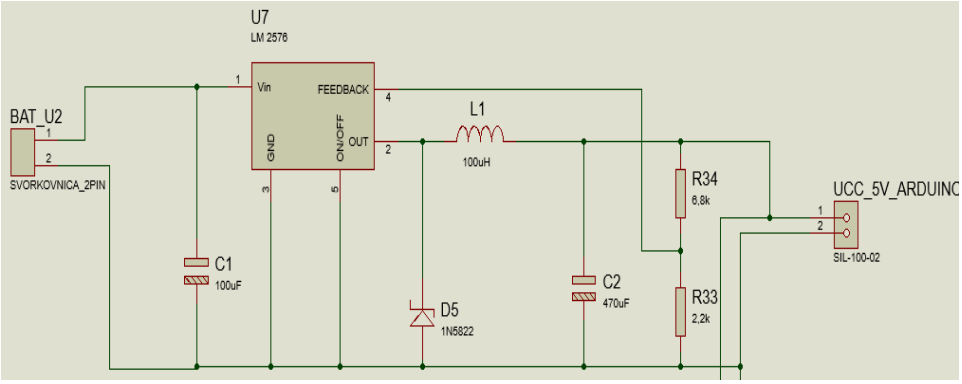

Fig. 4 LM2576ADJ as 5V voltage regulator scheme

The LM2576 is a series of regulators that are capable of bearing a 3 A load. Input voltage can be between 7 and 40 volts. These devices are available in fixed output voltage of 3,3 V, 5 V, 12 V, 15 V. It is necessary to have 5 V for our application. We will use LM2576ADJ because it suits the needed parameters.

If we want to have an output voltage of 5 V it is necessary to calculate the resistance in resistor divider at the output of the LM2576ADJ, from the center of which the feedback is routed. The value of these resistors can be calculated based on the equation (2).

$$U_{OUT} = U_{REF}\left(1 + \frac{R_2}{R_1}\right) \tag{1}$$

after modification we have:

$$R_2 = R_1\left(\frac{U_{OUT}}{U_{REF}} - 1\right) \tag{2}$$

where U_{REF} = 1,23 V, R_1 must be between 1 kΩ and 5kΩ.

In our case, the resistance R_1 is R_{33} and R_2 is R_{34} . We have chosen these values: U_{OUT} = 5 V and R_1 = 2,2 kΩ. If these values are substituted into the equation (2) we get the value of the resistance R_2 = 6,8 kΩ.

VI. CONCLUSION

In this article we have described a number of proposals for motor controlling converters based on the value obtained from the pressure of sensors. We needed to design the converter in order to change the direction and speed of rotation of DC motor.

In the first case, it is possible to control the direction and speed of rotation of motors by using one PWM signal. But it is necessary to adjust this signal as the inverting and non-inverting because of using a professional IR2111 drivers. Transistors must be switched complementary. During the measurement, we have found some errors. That is why we will not use this connection.

Another case is a unipolar control. Only one PWM signal is required for controlling the direction and speed of the motor rotation, just like in the first case. However, in this case, it was also not possible to regulate the motor, because a massive loss occurred at power transistors.

The most ideal solution was the last one. In this case, two signals are necessary. One is used for the management of two relays, which determine the direction of rotation. The other one is used to determine the speed of the motor rotation.

ACKNOWLEDGMENT

We support research activities in Slovakia / Project is co-financed from EU funds. This paper was developed within the Project "Centre of Excellence of the Integrated Research & Exploitation the Advanced Materials and Technologies in the Automotive Electronics ", ITMS 26220120055

REFERENCES

[1] http://www.infineon.com/dgdl/ir2111.pdf?fileId=5546d462533600a4015355c810e51682
[2] http://www.linuxfocus.org/common/src/article239/NE555.pdf
[3] http://www.ti.com/lit/ds/symlink/lm2576.pdf