Časopis priemyselnej elektrotechniky (JIEE)
Journal of Industrial Electrical Engineering
ISSN 2454-0900
www.jiee.eu

Power systems and their EMC

[1]*Irena KOVÁČOVÁ*

[1] Department of Theoretical and Industrial Electrical Engineering, Faculty of Electrical Engineering and Informatics, Technical University of Košice, Slovak Republic

[1]irena.kovacova@tuke.sk

Abstract — the paper is dealing with some electromagnetic compatibility (EMC) problems of converters and inverters, which are utilized for feeding of electric machines.

***Keywords* — EMC, power system**

I. Introduction

The importance of the electromagnetic compatibility (EMC) of all electrical products is rapidly increasing during the last decade. The environment is increasingly polluted by electromagnetic energy. The interference output into own surroundings, is doubled every three years, and covers a large frequency range.

II. EMC and environmental

The possible interfaces between sources and objects are shown in Fig. 1. The four basic types of coupling ways can realize these interfaces.

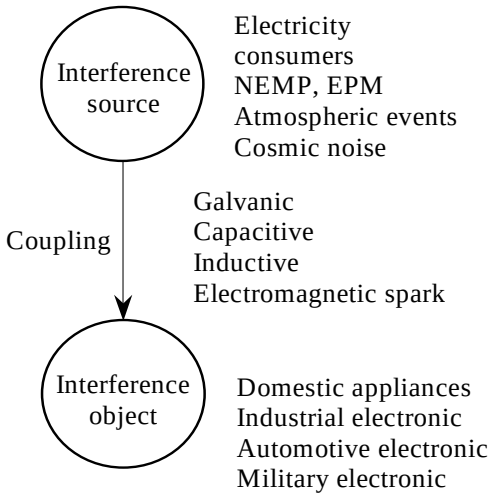

Fig. 1. Interference diagram

III. Inductive Coupling

For the predictive investigation of the inter-circuit inductive coupling we will focus our attention to the case of the two electrical loops l1 and l2 with the currents i1 a i2 and we will try to state the influence of the loop l1 on loop l2 as it is shown in Figs. 2 and 3.

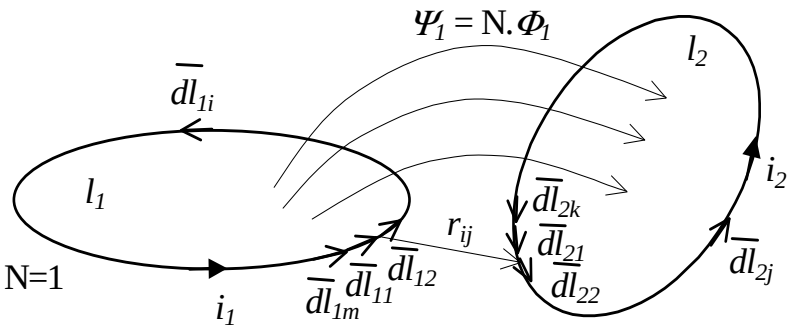

Fig. 2. The investigated loops

If we know the geometrical dimensions of the investigated loops - Fig. 3 and we want to state their mutual inductive coupling, then we can use the next relation (1) for the induced voltage, which is based on the 3D Cartesian coordinate system. Measured results are shown in Fig. 4.

$$u_i = -\frac{di}{dt}.\sum_{i=1}^{m}\sum_{j=1}^{k}\frac{\mu}{4\pi}\frac{(A_{x2i}-A_{x1i}).(B_{x2j}-B_{x1j})+(A_{y2i}-A_{y1i}).(B_{y2j}-B_{y1j})+(A_{z2i}-A_{z1i}).(B_{z2j}-B_{z1j})}{\sqrt{\left(\left(B_{x1j}+\frac{|B_{x2j}-B_{x1j}|}{2}\right)-\left(A_{x1i}+\frac{|A_{x2i}-A_{x1i}|}{2}\right)\right)^2+\left(\left(B_{y1j}+\frac{|B_{y2j}-B_{y1j}|}{2}\right)-\left(A_{y1i}+\frac{|A_{y2i}-A_{y1i}|}{2}\right)\right)^2+\left(\left(B_{z1j}+\frac{|B_{z2j}-B_{z1j}|}{2}\right)-\left(A_{z1i}+\frac{|A_{z2i}-A_{z1i}|}{2}\right)\right)^2} \quad (1)$$

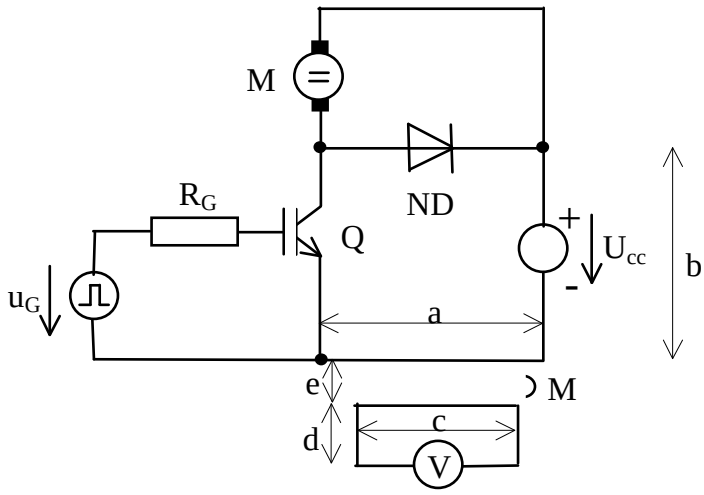

Fig. 3. The investigated circuits

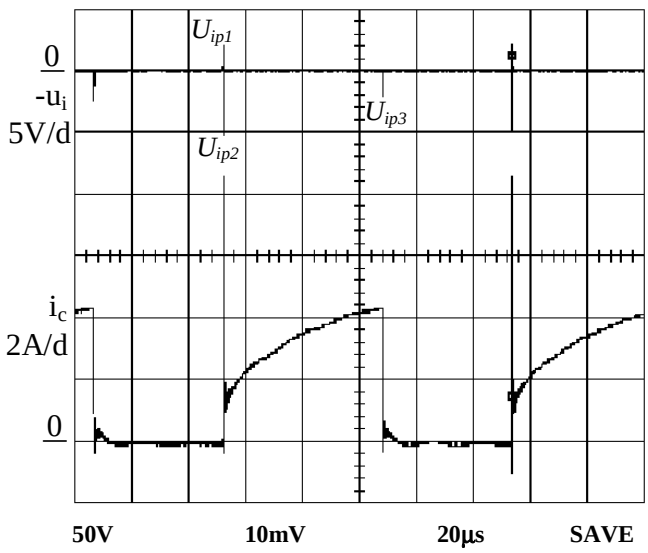

Fig. 4. The measured voltage $-u_i$ and current i_C

IV. CAPACITIVE COUPLING

Capacitive coupling is typical for galvanically separated circuit nodes, between which exists mutual influence by individual intensity vectors $\overline{E}_i$ of electro static field, Fig. 5.

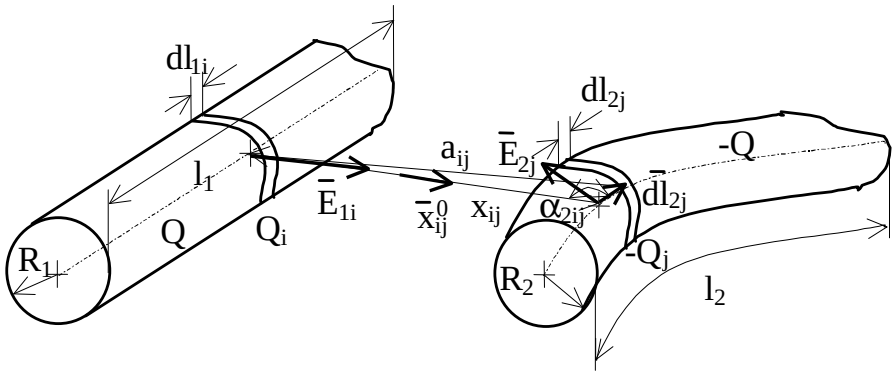

Fig. 5. Capacitive coupling

In such case the influence value is given by rising or decreasing slope of potential in described nodes, electrode area dimensions, space dielectric property and wire geometrical ordering in described nodes. Searched value of the parasitic capacitance is possible to determine as:

$$C_{12}=\frac{2\pi\varepsilon}{\left(\sum_{i=1}^{m}\frac{\ln\frac{x_{ij}-R_2}{R_1}\cdot\sqrt{\left(1-\left(\frac{x_{ij}^2+\left(\frac{dl_{2j}}{2}\right)^2-a_{ij}^2}{x_{ij}.dl_{2j}}\right)^2\right)}}{dl_{1i}}+\sum_{j=1}^{n}\frac{\ln\frac{x_{ji}-R_2}{R_1}\cdot\sqrt{\left(1-\left(\frac{x_{ji}^2+\left(\frac{dl_{1i}}{2}\right)^2-a_{ji}^2}{x_{ji}.dl_{1i}}\right)^2\right)}}{dl_{2j}}\right)} \quad (2)$$

Circuit investigation was done according the Fig. 6. Measured results are shown in Figs. 7 and 8.

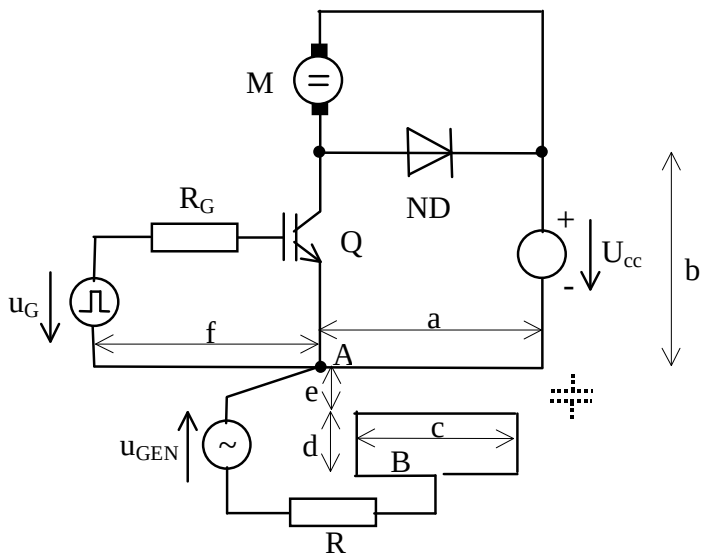

Fig. 6. Investigated circuit

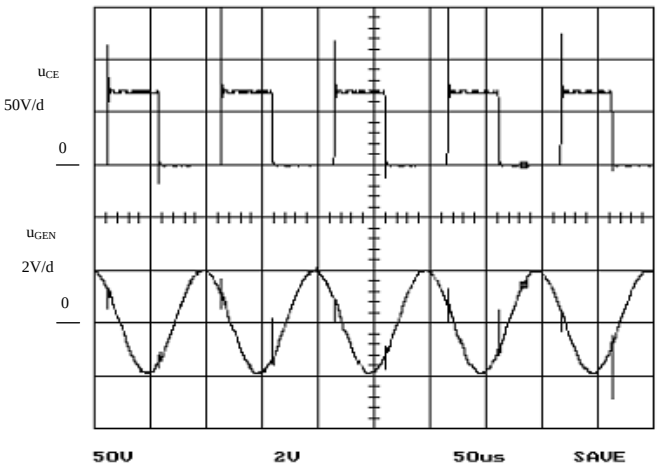

Fig. 7. Measured results for f = 10 kHz

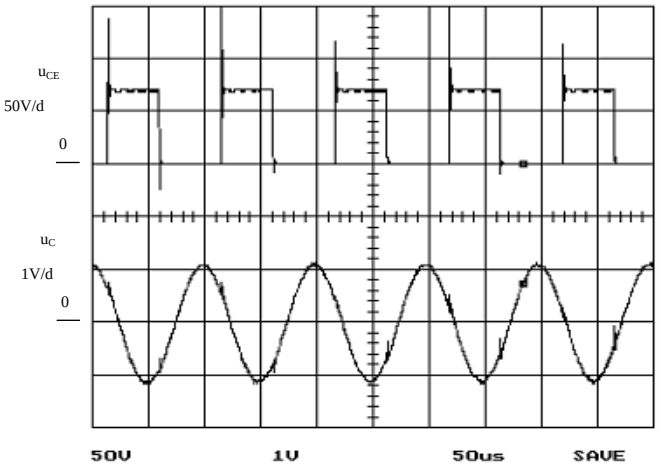

Fig. 8. Measured results for f = 10 kHz

V. GALVANIC COUPLING

In the following step, we will try to obtain imagination about the galvanic coupling existence of only two interacting circuits interconnected by one common conductor. It is suitable to suppose, that pure resistors create the loads and that the circuits are in steady states and they are supplied from DC voltage sources as it is shown in figure Fig. 9 and Fig. 10.

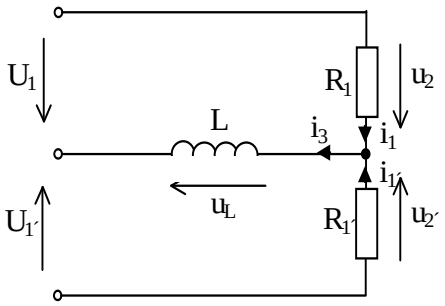

Fig. 9. The investigated circuit

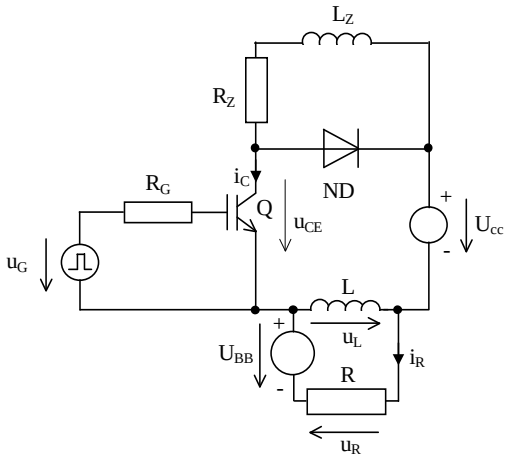

Fig. 10. The connection of the measured circuit

Let the voltage source $U_{1'}$ is switching, then the voltage u_2 can reach the values:

$$u_2 = U_1 - u_L = U_1 - L.\frac{di_3}{dt} = U_1 + U_{1'}.\frac{R_1}{(R_1 + R_{1'})}.e^{-\frac{R_1 R_{1'}}{L(R_1+R_{1'})}.t} \tag{3}$$

$$u_{2'} = U_{1'} - u_L = U_{1'} - L.\frac{di_3}{dt} = U_{1'} - U_{1'}.\frac{R_1}{(R_1 + R_{1'})}.e^{-\frac{R_1 R_{1'}}{L(R_1+R_{1'})}.t} \tag{4}$$

depending on switching the slope polarity. Measured results are displayed in figure Fig. 11.

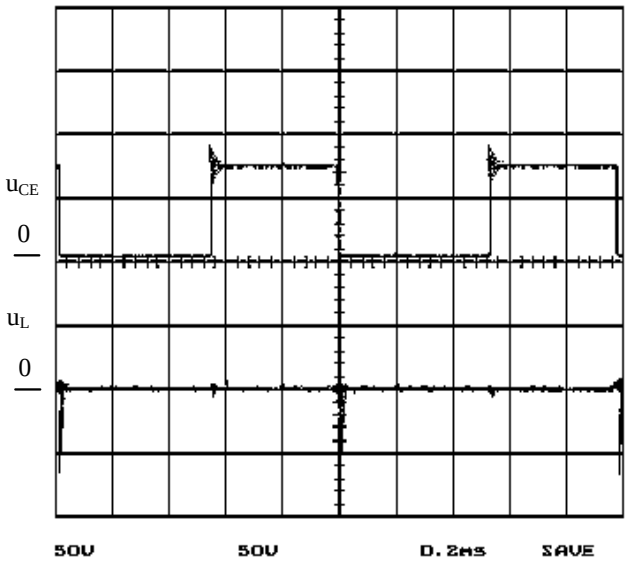

Fig. 11. Results obtained by measurement

VI. ELECTROMAGNETIC COUPLING

Electromagnetic coupling is typical for the galvanically separated electrical circuits between of which exist the exchange of the electromagnetic energy. Such energy is then presented in the form of radiated and absorbed power. The investigated circuit is shown in Fig. 12.

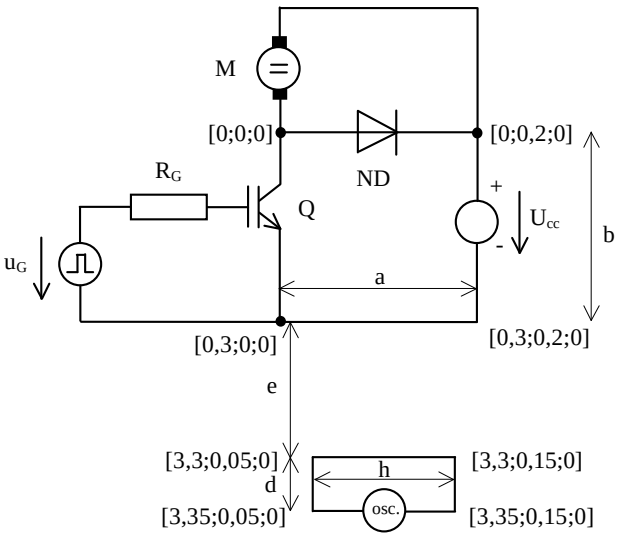

Fig. 12. Scheme of the investigated circuit

A part of the induced voltage ui, caused by the magnetic field energy, is given as:

$$u_{imag} = -\mu_0 . S . \frac{\sqrt{H_x^2(t+\Delta t)+H_y^2(t+\Delta t)+H_z^2(t+\Delta t)} - \sqrt{H_x^2(t)+H_y^2(t)+H_z^2(t)}}{\Delta t} \quad (5)$$

A part of the induced voltage ui, caused by the electric field energy, is given as:

$$\begin{aligned} u_{ielek} &= \left(E_{xA}(t+\Delta t') - E_{xA}(t)\right).d + \left(E_{xC}(t+\Delta t') - E_{xC}(t)\right).d + \\ &+ \left(E_{yA}(t+\Delta t'') - E_{yA}(t)\right).h + \left(E_{yC}(t+\Delta t'') - E_{yC}(t)\right).h \end{aligned} \quad (6)$$

where $\Delta t' = d/c$, $\Delta t'' = h/c$. Measured induced voltage is shown in Fig. 13.

VII. Conclusion

The measured results are confirming the correctness of the above-mentioned formulas obtained by the mathematical analyses and so can be used for predictive EMC investigation.

References

[1] Kováčová, I. - Kaňuch, J. - Kováč, D.: Electromagnetic compatibility of the power electrical engineering systems, *Equilibria Publishing, Košice, 2005*
[2] Web source http://dal.hnonline.sk/c1-44254690-skladove-priestory-obsadzuju-automaty
[3] Web source http://neuron.tuke.sk/~stupakp/Moje/ROBOTY.htm
[4] Kováčová, I. - Kováč, D.: Converter's EMC – parasitic capacitances. *Electronics Letters*, Vol. 5, No.1, 2005, 6 pages, ISSN 1213-161X
[5] Ráček, V. - Solík, I.: Power semiconductor systems II-III. Bratislava: *Academician Ladislav Cigánek foundation*, 1993, 396 pages, ISBN 80-967066-0-8