Časopis priemyselnej elektrotechniky (JIEE)
Journal of Industrial Electrical Engineering
ISSN 2454-0900
www.jiee.eu

Autonomic transport LEGO robot with optical and ultrasonic sensors

[1]*Irena KOVÁČOVÁ*

[1] Department of Theoretical and Industrial Electrical Engineering, Faculty of Electrical Engineering and Informatics, Technical University of Košice, Slovak Republic

[1]irena.kovacova@tuke.sk

***Abstract* — the paper describes an autonomic mobile transport robot with optical and ultrasonic sensor system based on Lego Mindstorms NXT 2.0. This model represents a device that would be able to carry different segments of cars in their manufacture. The transport-robot follows with optical sensor monitors the line marked in contrasting colors on the floor, for example black color on white background or reversal. The ultrasonic sensor can avoid collision with unexpected objects that may appear before him.**

***Keywords* — mobile transport robot, control unit, sensors, actuators, software**

I. Introduction

Nowadays automation is becoming an irreplaceable part not only in car producing industry. Sophisticated automatic devices are replacing manual labor of the individuals. In car production, either passenger vehicle or freight vehicle are used different devices for transport such as conveyor belts or

carts with rails. This model of the robot could replace such vehicles. Robot movements will be led by the contrast line marked on the floor using an optical light sensor, which monitors the track, and ultrasonic sensor will avoid the collision with unexpected obstacles. In such way designed assembly line may be easily altered depending on the immediate needs of production. For example, when changing the vehicle model way it will produce another product. If necessary it is easy to change the leading track of transport only with repainting line on the floor. With carts running on rails is change of track impossible. Thus created workspace is very adaptable to the needs of the manufacturer. Moreover if into the track of vehicle gets an object that could cause conflict ultrasonic sensor detects it and the vehicle stop.

II. Description of the device

The device consists of an intelligent NXT brick that is actually the brain of the robot, two servo motors, optical (color) sensor that monitors the line, and ultrasonic sensor for monitoring whether there is an obstacle in front of the vehicle.

A. NXT Intelligent brick

The main part of a smart cube is 32-bit ARM7microprocessor type AT91SAM7S256 Atmel with 48MHz operating frequency, internal 256 kb sized flash memory where are stored individual programs, and 64kb of RAM memory. The microprocessor works with 8bit coprocessor with 4 kilobytes flash memory, 512 bit ram memory and clocked at 8 MHz. The brick has four inputs numbered 1234, here are connected sensors and three outputs ABC, here are connected servomotors. Sensors and motors are connected with six line cable and RJ-12 connector. This connector is different from classical RJ-12 connector it has the lock on right side and classical connector has it in the

middle. Another part of the brick is the display and four buttons. The display is LCD with a resolution of 100 x 64 pixels and displays 8 lines, two buttons are used to orientate into the menu to the left or to the right and the other two are used to confirm the operation and make step back. Brick can be connected to a PC using a USB cable or Bluetooth. To supply smart cube serves 6 AA batteries (1.5 V), or a lithium battery with a capacity of 1400 mAh.

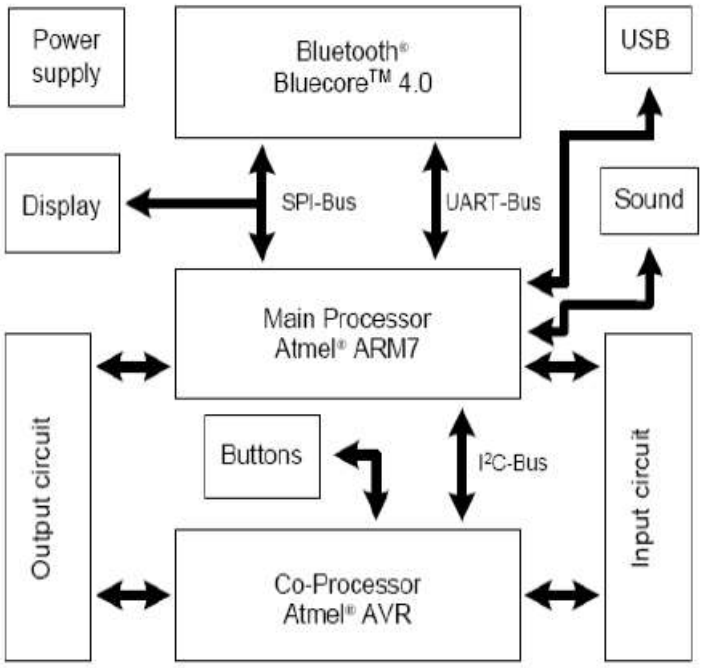

Fig. 1. Block diagram of the intelligent brick

B. Servomotors

Each servomotor has built-in rotation sensor. The servomotor can be controlled very precisely after one degree in the range from 0 ° to 360 ° what provides very precise control. Servomotor without load reaches 170 rpm and maximum torque 50N.cm. Low speed and power of engine is the result of internal gearing. 9 Volts batteries supply the motors and in the unloaded condition at 170 rpm each servomotor takes 60 mA. In the maximum stage of loading when rotor does not rotate each engine takes 2A. Such high current servomotor can withstand only in a short time therefore it is protected with thermistor that limits the maximum current flowing into the engine.

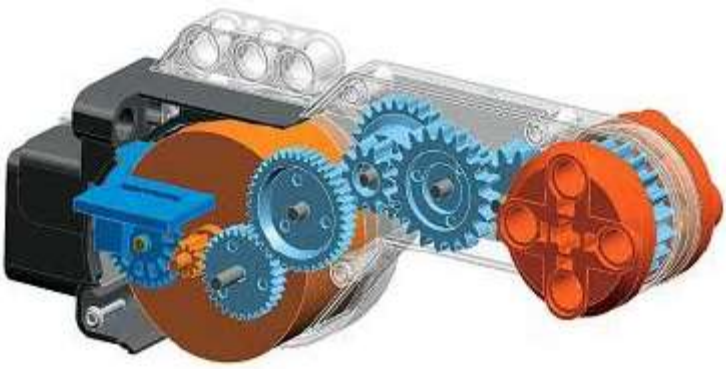

Fig. 2. Look inside the servomotor

Programming of servomotor in the NXT-G program is simple. It can be used Move or Motor icons. Using the Move icon you can adjust both motors speeds and this is used in mastering direction of vehicle only with different speeds and powers of motors. This command determines the direction of track of the vehicle if it turns left, right or goes straight. It also can be managed the strength, duration in seconds, or rotation of the engine in degrees or rotation speed. This is monitored by the built in speed sensor and for one revolution it is considered 360 degrees. The last option is the Unlimited duration of rotation till unexpected damage or some specified condition occurs. Command Motor has the same job as the Move but it manages only one servomotor.

Fig. 3. Order move

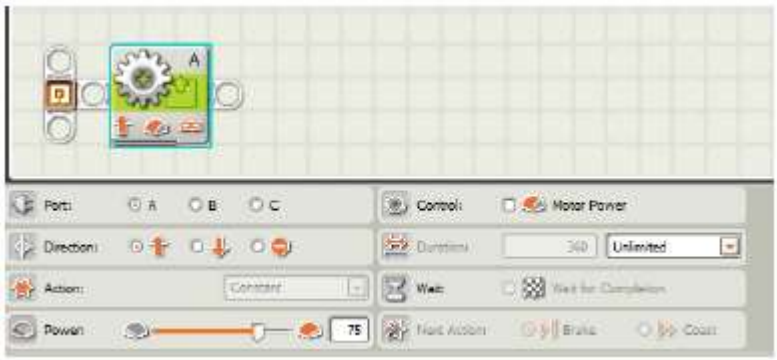

Fig. 4. Order motor

C. Optical sensor

The color sensor is used as the optical sensor. It works as a sensor that detects six colors. Can recognize light intensity in the room and surfaces or may work as a lamp emitting red, green and blue light. The sensor uses RGB LED diodes that sequentially emit light on subject and then evaluates the reflected light. The sensor is sensitive to all wavelengths. It connects to port 3 the optimal position for sensor is in distance 1 cm above the surface and should be placed perpendicularly otherwise the data may be inaccurate.

Fig. 5. Color optical sensor

Light sensor adjusts much like a servomotor. In program for a mobile robot it is used in branching

working in light sensor mode it is possible to set so. The first step of programming was to load value that has displayed when the sensor was above pure black background - so it was the black line value. The value obtained was somewhere around 25 it depended on the inequalities of the track so that was why the setting was on 30. On a white background value was about 50 depended on whether there was completely clean white surface or there were shades of some different colors. When the sensor was partly above the black line and partly above the white background it had to get to the threshold value. This value was ranged somewhere around 27 + - 2 therefore it was chosen 30 as the threshold value.

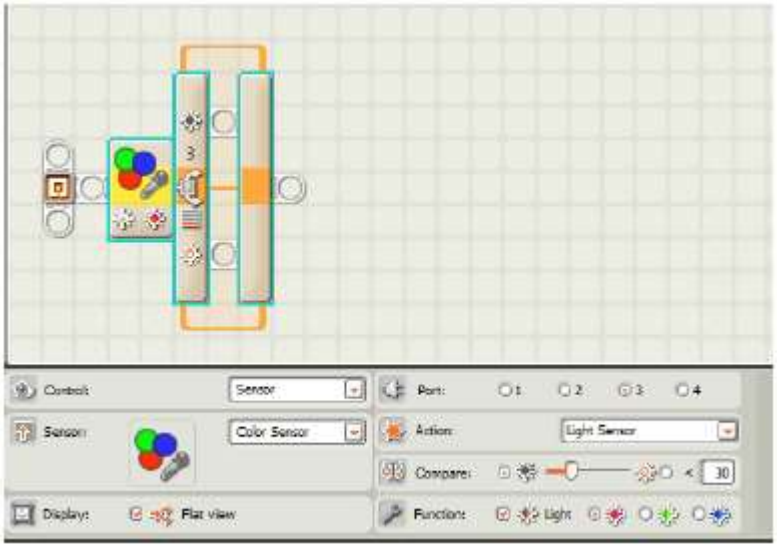

Fig. 6. Branching with a color sensor, working in fashion light sensor

D. Ultrasonic sensor

This sensor works by sending and receiving sound waves. It consists of two eyes, while the left eye serves as a signal transmitter and the right eye serves as a receiver. The sensor sends a sound wave into the space that is reflected from an object located in front of the sensor and returning to the sensor that it directly. Based on the time which has passed from posting to the adoption of signal may determine the distance in which is object located. The maximum distance to which it can operate is 255 cm with an accuracy of +/- 3 cm. Distances less than 3 cm cannot be measured. The sensor is connected to port 4. For recognize are the best articles from the large solid materials from which the wave reflects well. Contrast poorly identify round objects made of soft materials, also looking for harder courses, which are thin or small. For best operation should be placed in a horizontal position when it is placed at angle that distorts the field.

Fig. 7. Ultrasonic sensor

Like a light sensor works in the branching, so that the sensor operates in a loop, which is performed using an ultrasonic sensor. The program can adjust the distance that it exceeds the loop will cease to be repeated. In another program may be adjusted such that it takes up another sub, it's all individual, the possibilities are many. Distance is set in cm or inches and is also set whether to consider a smaller

or larger distance than is set.

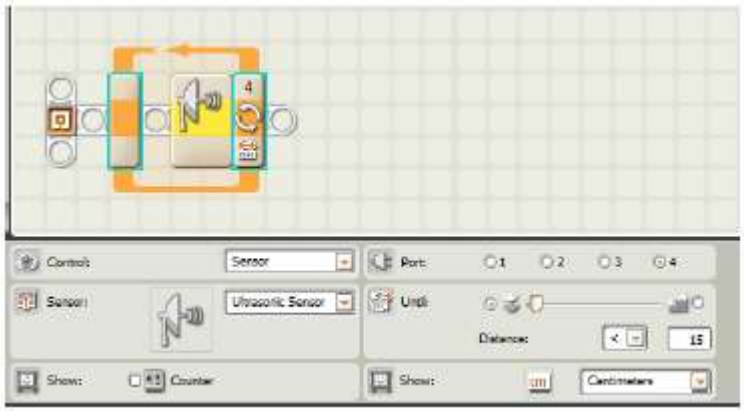

Fig. 8. Programming of ultrasonic sensor

III. PROGRAM

On programming the NXT brick, there are several programs such as graphic NXT-G, which is part of a kit, or a variety of text editors based on the C language as BricxCC. NXT-G program is user-friendly, the programs are moving to block orders, where such movement is adjusted values engines or loop where the repetition of the conditions set by sensor, time, or counter again and again. You can track the current values of sensors and motors. Commands are performed in the order they are arranged (stacked) in a row. The disadvantage of this program environment is the breadth of programs. The increasing number of orders, the whole program becomes opaque. Good programming environment is BricxCC it is classical text editor, which use language based on C language.

The first part of the program is monitoring the area ahead of the vehicle with ultrasound sensor. At the beginning of the repetitive loop is based on data from the ultrasonic sensor. The value which is sensor taking how limit is 15 cm. This loop will be executed until the value of the distance will be greater than is set in the program, in this case it is 15cm, then implementing a program to follow the black line. When the value falls below the 15 cm loop is completed and made to order to stop the engine. Sensor is connected to port 4. The second part of the program is watching the black line. The program begins with branching, which is performed on the basis of color sensor working in a light sensor mode. The sensor is connected to port 3. Light value should be set somewhere in the middle of the reference range. Minimum value is the value loaded from the center line and the maximum value is the value for pure white background. Robot tries to follow the line to keep the left edge of the look from the perspective of the robot. If the value is greater than the set in this case 30 is performed rotation of the motors connected to port B with a power of 10 and subsequently rotate the motors connected to port C to the 70th power. If the value drops below 30 shall be turning the engine on the port B with a force of 70 and subsequently rotate the engine with the power of the 10. The resulting movement is not smooth but the robot follows the line nicely.

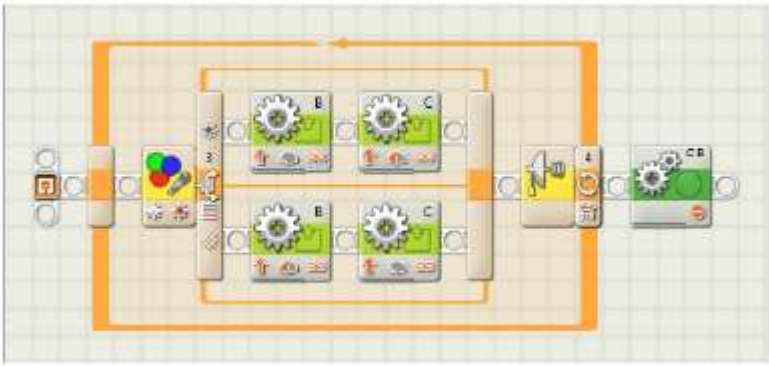

Fig. 9. Program example

IV. CONCLUSION

The result of this work is a functional model of an autonomous transport robot. The system works fairly reliably, it can be gradually improved and expanded by rotating an ultrasonic sensor which could be identified objects in the space. For example, could come around the object located on the line before him.

REFERENCES

[1] NXT LEGO Mindstorms *User Guide*, 2009
[2] Lego Techno Motors compared characteristics. Available on Internet: *http://www.philohome.com/motors/motorcomp.htm*
[3] The Mindstorms NXT review. What's inside the NXT brick. Available on Internet: *http://mindstormsnxt.blogspot.com/2006/08/whats-inside-nxtbrick.html*
[4] Web source http://dal.hnonline.sk/c1-44254690-skladove-priestory-obsadzuju-automaty
[5] Web source http://neuron.tuke.sk/~stupakp/Moje/ROBOTY.htm