JIEE Časopispriemyselnejelektrotechniky
Journal of Industrial Electrical Engineering
ISSN 2454-0900
www.jiee.eu

Thermal model of hybrid stepper motor

[1]*Branislav FECKO*, [2] *Tibor VINCE*

[1,2]Department of Theoretical and Industrial Electrical Engineering, Faculty of Electrical Engineering and Informatics, Technical University of Košice, Slovak Republic

[1]branislav.fecko@tuke.sk, [2]tibor.vince@tuke.sk

***Abstract* — The first part of paper describes the electric simulation of hybrid stepper motor. The second part describes thermal behavior model of hybrid stepper motor created in software Simulink. The simulation shows the heating and cooling of the motor. In the last part we compare the measured stepper motor temperature with the temperature obtained by Simulink simulation.**

***Keywords* — heating, hybrid stepper motor, Matlab, Simulink, thermal simulation**

I. Introduction

Stepper motors are often use in robotic systems, 3D printers and other applications for actuators in our case is used as actuator of axis in CNC milling machine. We need create thermal model of engine to calculate the heat generated by the engine. The heat in the stepper motor is generated by copper losses and iron losses. More detailed analysis was created in the article [1]. This paper is focused to research to copper losses and their influence to heating of the stepper motor. In the last part of paper the stepper motor thermal model is verified by the measured values.

II. Electrical Simulation in Simulink

A simulation of the stepper motor is shown in Fig. 1. Wiring in Simulink is used to create a simulation model describing the electrical properties of the motor. Following verification of the simulation, it will be extended to simulate the thermal conditions of the engine. The simulation includes a stepper motor block, voltmeters and ammeters placed on both windings. Stepper motor is controlled by stepper motor driver *A4988*, in the simulation, a suitable available controller was used to simulate the used controller.

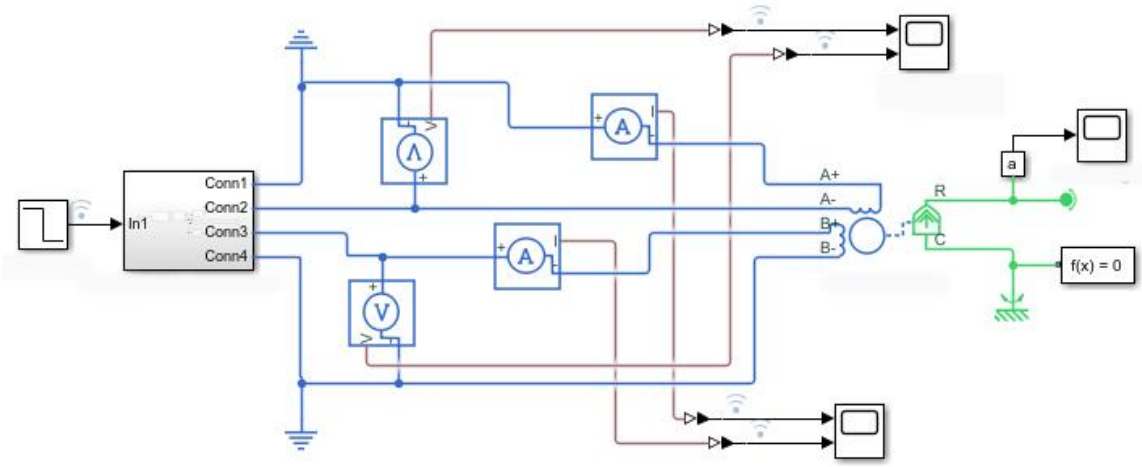

Fig. 1 Electrical simulation of hybrid stepper motor in Simulink

The simulation and subsequent verification of the engine was performed under the same engine conditions. After creating the correct model, we started to create a thermal model which is described in the next chapter.

III. Thermal simulation in Simulink

The thermal simulation of the stepper motor consists of the power supply of the motor, the stepper motor, the module used for generating losses, the thermal capacities of the individual parts of the motor and their transmission between them. The thermal simulation is shown in Fig. 2.

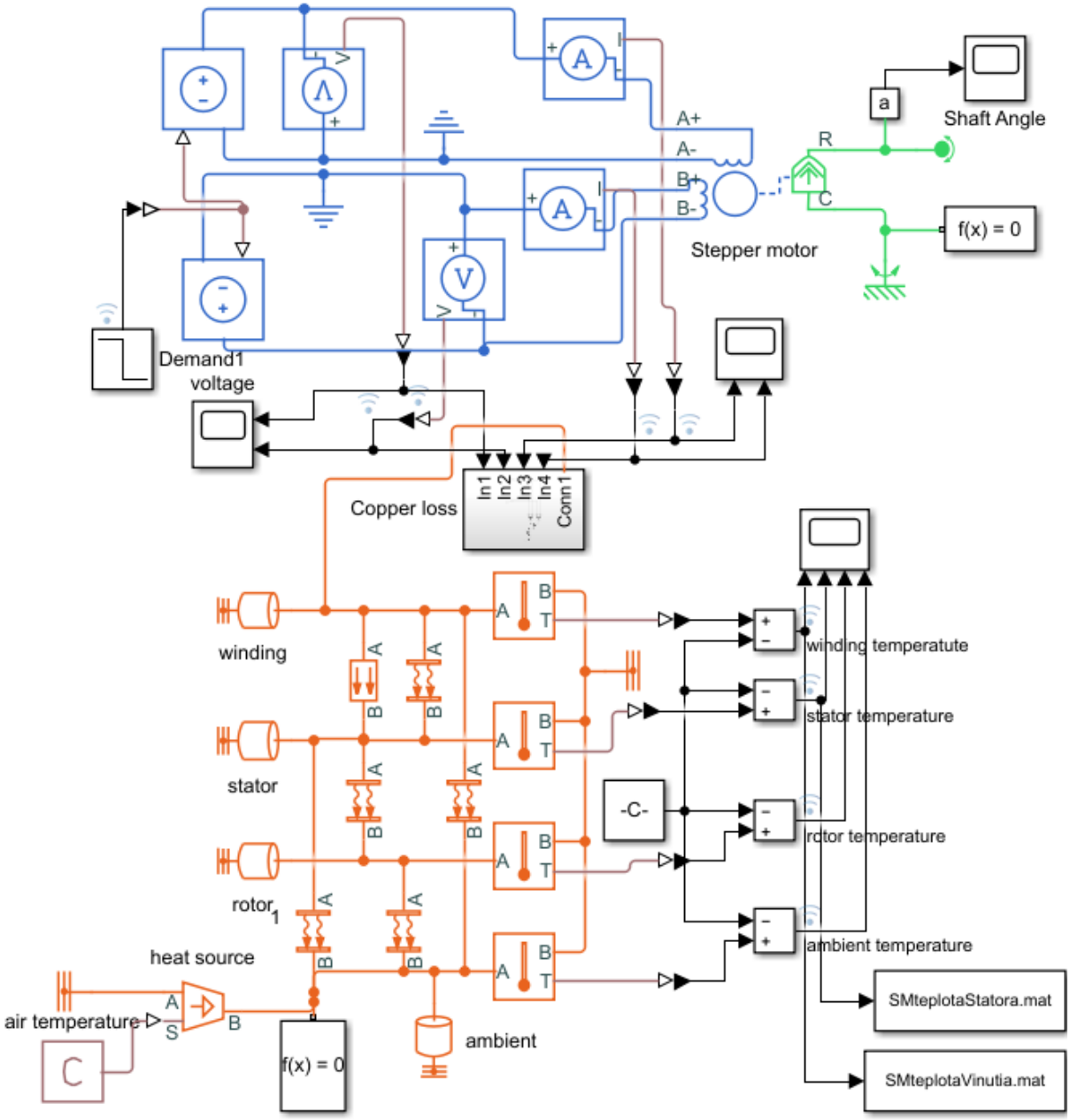

Fig. 2 Thermal simulation of stepper motor in Simulink

The electrical part of the simulation is made of blue and the simulation of the thermal conditions of the engine is drawn in orange. For the simulation the components of the thermal mass representing the parts of the engine and the components of the heat and convection were used. The heat source was used to model copper losses that were placed directly on the motor winding. The thermal simulation describes the state at a constant current of 1.7 A in both motor phases.

The simulation was used to verify the individual thermal conditions of the engine, such as heat transfer between components and surroundings. During the simulation, both motor windings were excited continuously, in this state the rotor does not move and current flows through the windings. The simulated state is suitable for verifying the accuracy of Joule losses calculation due to the non-creation of other types of rotor movement losses.

IV. VERIFICATION OF SIMULATED DATA

We have created a thermal model to simulate the temperature of individual engine components. To verify the accuracy of the simulation, it was necessary to verify the accuracy of the model by real motor measuring. The conditions of simulation and measurements are shown in Table 1. The measurement was performed by an automated system recording the measured data from the sensors.

Table 1
Temperature measurement conditions

Current:	1,7 A
Voltage:	3,2-3,5 V
Ambient temperature:	22 °C
Temperature meter:	Multimeter UT 803
Type of load:	Without load

Fig. 3 shows the temperature measurement of the individual parts of the stepper motor. In the case of the stepper motor, we were able to measure the winding temperature directly. Sensor *A* is in direct contact with the winding. Sensors *B* and *C* are located on different parts of the stator. The measured stator temperature was obtained by averaging the values of sensors *B* and *C*.

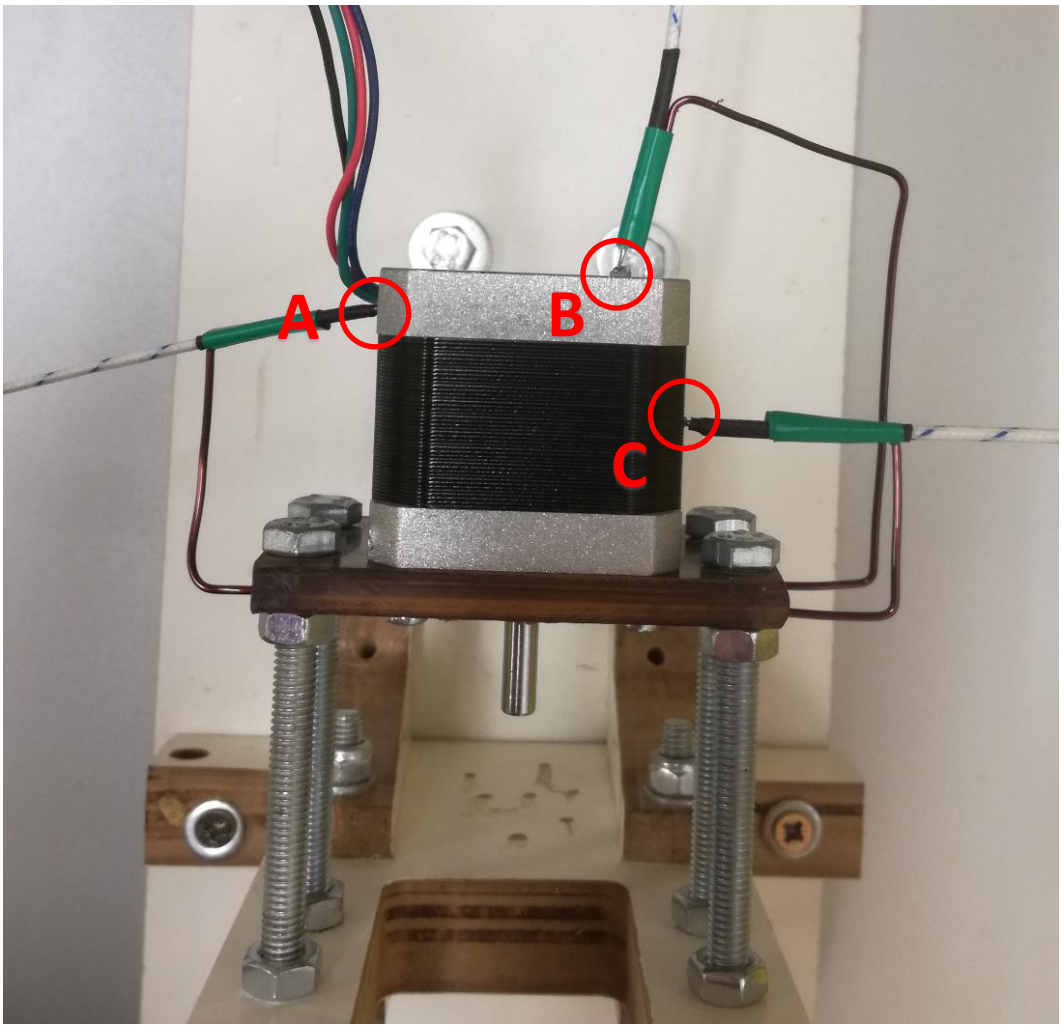

Fig. 3 Placement of thermal sensors

For measurement temperature was used system with a resolution of 1 ° C therefore it was necessary to approximate the measured data. The winding temperature and stator values were obtained by measurement. The measured and subsequent approximated data by the least squares method are shown in the Fig. 4 and Fig. 5.

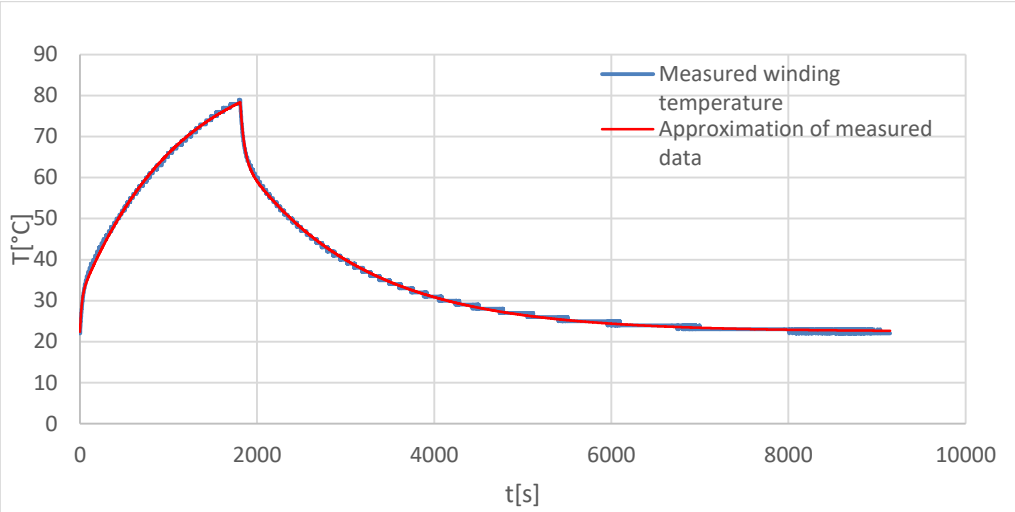

Fig. 4 Approximation of measured stepper motor temperature of winding

For a clear representation of the thermal conditions of the motor we loaded the motor with the maximum prescribed current value. The measurement was performed so that the motor winding temperature does not exceed the maximum allowed temperature of 80 ° C.

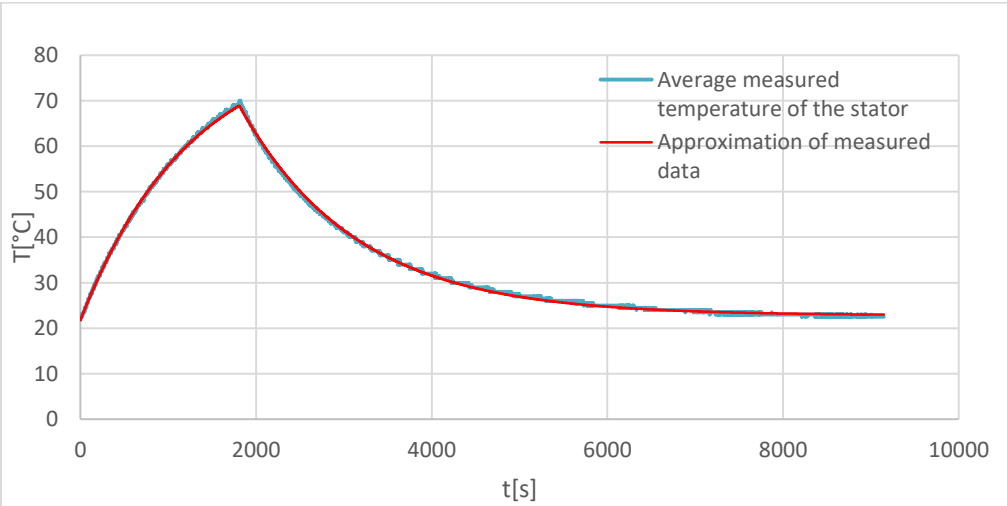

Fig. 5 Approximation of measured stepper motor temperature of stator

By approximating the measured data we obtained data suitable for comparison with temperature data obtained by simulation. A comparison of the measured and simulated data is shown in the Fig. 6 and Fig. 7.

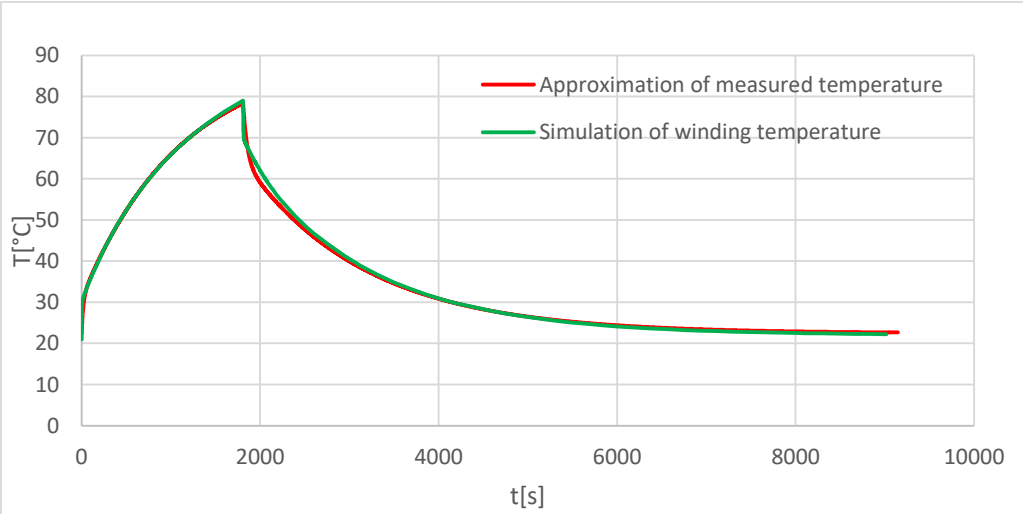

Fig. 6 Comparison of measured and simulated temperatures of the stepper motor winding

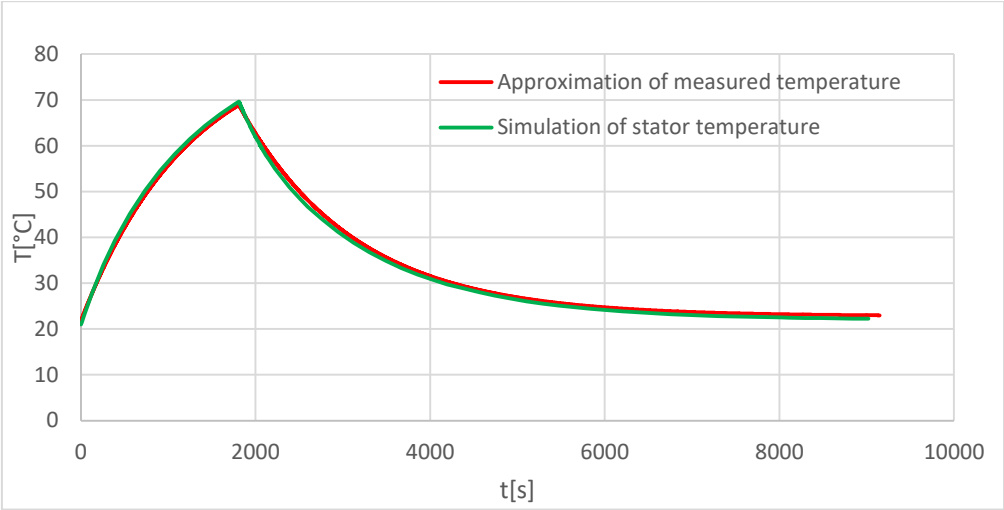

Fig. 7 Comparison of measured and simulated temperatures of the stator part of the stepper motor

V. Conclusion

By comparing the real measured values and simulated data we can conclude that the model is correct. In the following research it will be necessary to extend the model by iron losses simulation and to test the results at different load and engine speed. After its verification it will be subsequently used in thermal simulation of CNC milling machine.

References

[1] Fecko B., Vince T.: Electromagnetic losses in stepper motors. Vol. 2, Issue 3 (2018) Journal of Industrial Electrical Engineering, Vol.2 (2018), Issue 3, pp: 30-33, ISSN 2454-0900

[2] MORAR, Alexandru. The modelling and simulation of bipolar hybrid stepping motor by Matlab/Simulink. Procedia Technology, 2015, 19: 576-583.

[3] Fecko B., Vince T.: Simulink simulation of DC motors. Vol. 3, Issue 1 (2019) Journal of Industrial Electrical Engineering, Vol.2 (2018), Issue 4, pp: 44-47, ISSN 2454-0900

[4] V. Hrabovcová, P. Rafajdus, M. Franko, P.Hudák.: Meranie a modelovanie elektrických strojov. Vydala Žilinská univerzita v Žiline/EDIS-vydavateľstvo ŽU. 2014. ISBN 978-80-554-0852-1

[5] Ayasun S, Karbeyaz G. DC motor speed control methods using MATLAB/Simulink and their integration into undergraduate electric machinery courses. Computer applications in engineering education. 2007; 15(4):347-54.

[6] MENDES, Nathan; OLIVEIRA, Gustavo HC; DE ARAÚJO, Humberto X. Building thermal performance analysis by using matlab/simulink. In: Seventh International IBPSA Conference, Rio de Janeiro, Brazil. 2001. p. 473-480.

[7] MathWorks: Simulink documentation [online] [20.03.2019.]. Available online: https://ch.mathworks.com/help-/simulink/